REVISIONS				
REV.	DATE	DESCRIPTION	DRAWN BY	CHECKED BY
A0	12/03	REV A0 Release	TO	DR
B0	10/04	VdS dewatering holes changed (not this version)	ME	MW
C0	04/05	Added ribs in top-rim areas, total 16 added	ME	DR

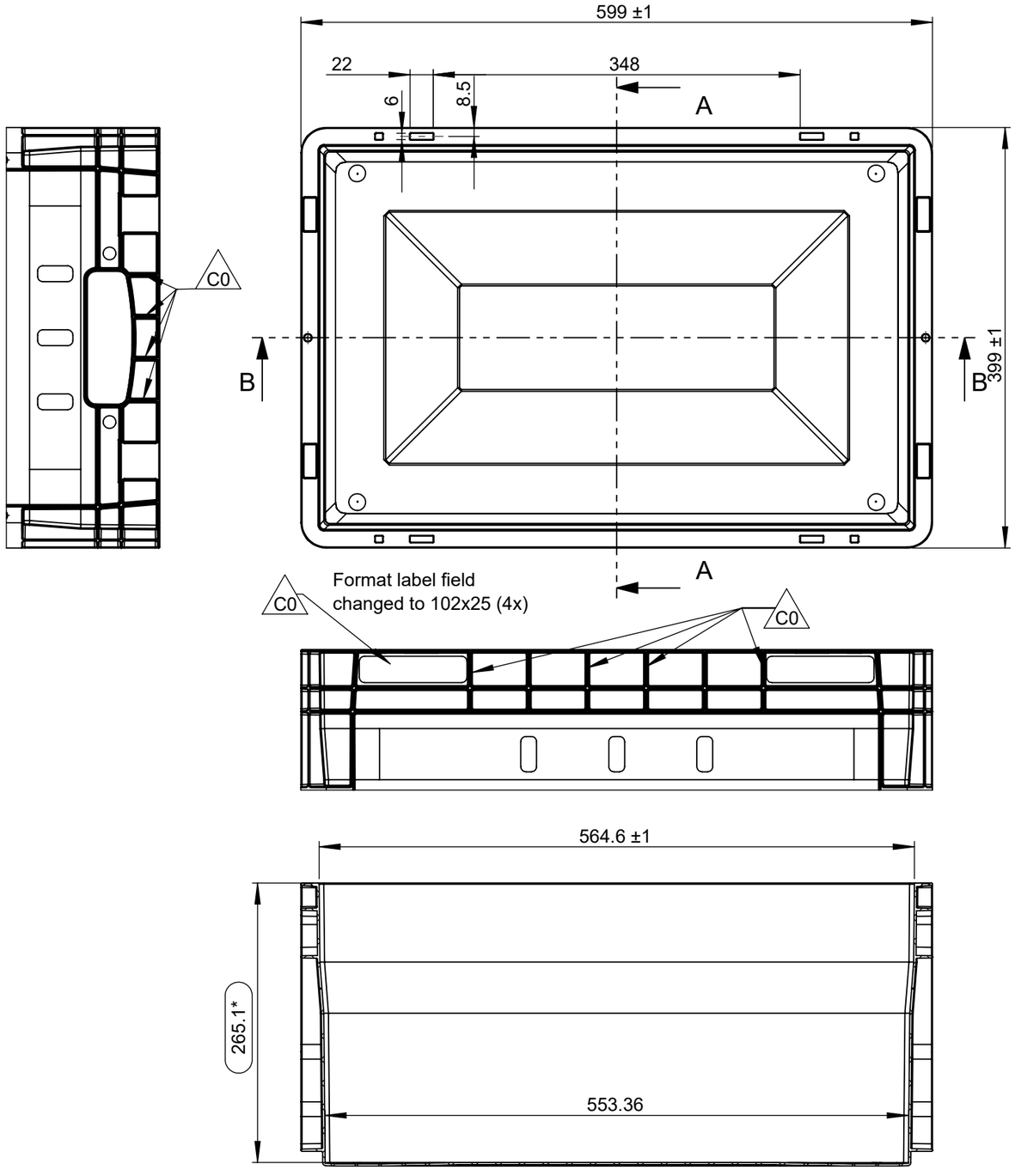

SECTION B-B
SCALE 1 : 5

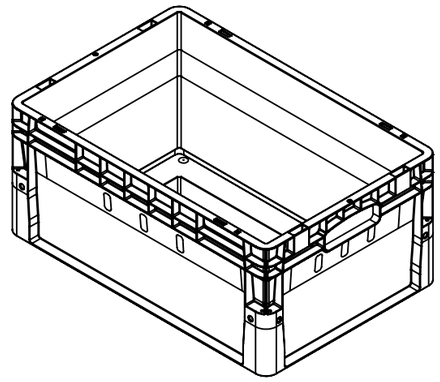

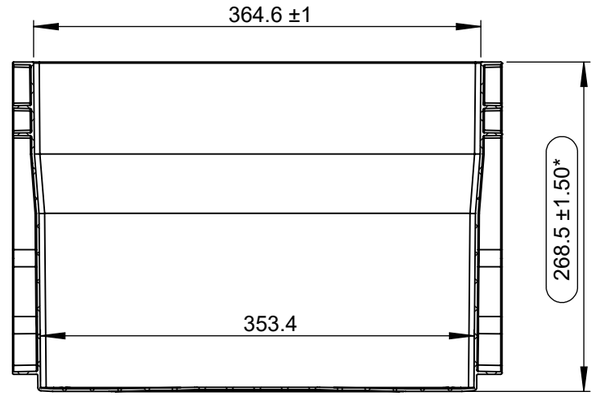

SECTION A-A
SCALE 1 : 5

TOOLNUMBER:
4

(*) **Other available height variants:**

- 320: 318±1.5 / 315.1
- 420: 418±1.5 / 415.1

BPO Nederland bv
Scheepmakerij 11
2628 AA Delft
+31(0)15 362 0000
www.bpo.nl

MATERIAL	WEIGHT APPROX.	VOLUME
PP	1.87 kg	2.05 l
SURFACE FINISH	**GENERAL TOLERANCE**	
Standard	DIN ISO 20457: 2021 - TG5	

PROJECT NAME		PART NUMBER	SCALE	UNITS
Behälterserie		DP61	1:2.5	mm
PROJECT NUMBER	**CUSTOMER**	**PART NAME**	**FORMAT**	**SHEET**
5684	WERIT	AB642700	A3	1 / 5
DRAWN BY	**CHECKED BY**		**DRAWN DATE**	**REV.** C0
TO	DR		06/02/2026	

Proprietary data, company confidential.
All rights reserved. Passing on and copying of this document, its use, and communication of its contents it not permitted unless explicitly granted.

REVISIONS				
REV.	DATE	DESCRIPTION	DRAWN BY	CHECKED BY
A0	12/03	REV A0 Release	TO	DR
B0	10/04	VdS dewatering holes changed	ME	MW
C0	04/05	Added ribs in top-rim areas, total 16 added	ME	DE

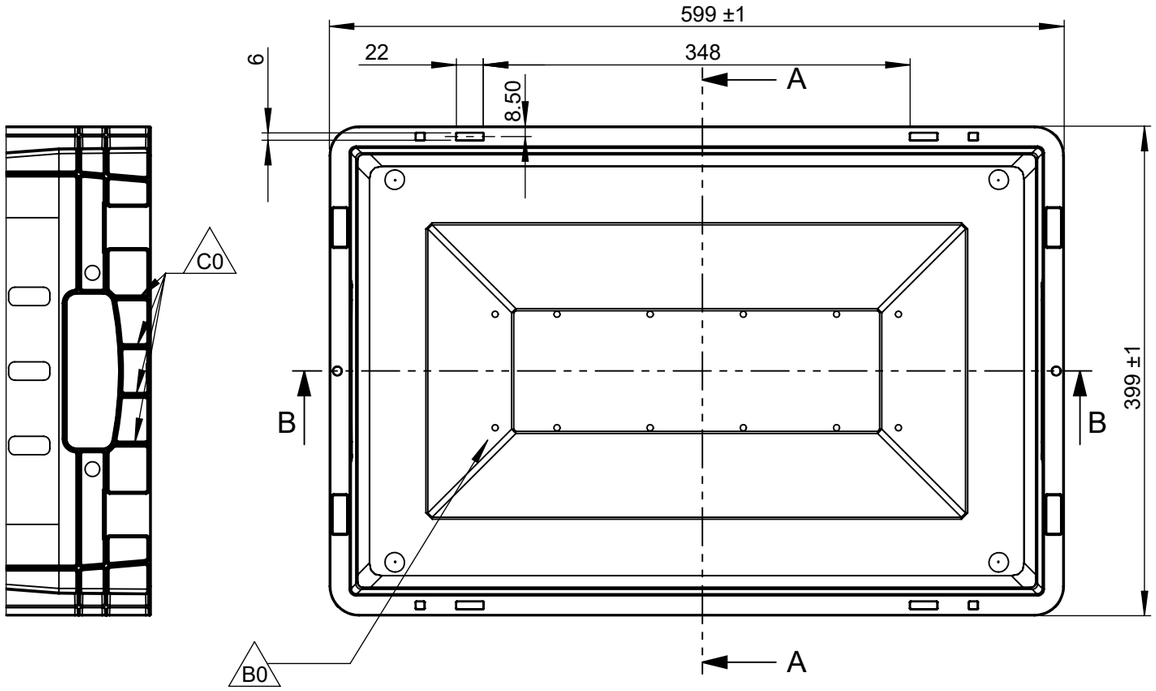

VdS holes in the corners have been moved
towards the middle of the bottom (4x)

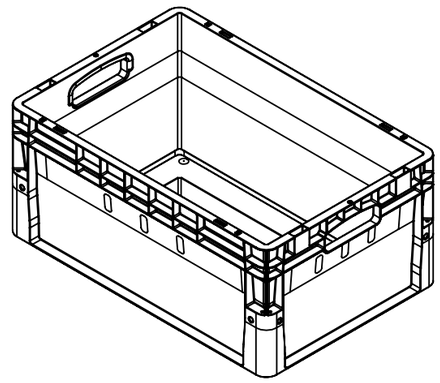

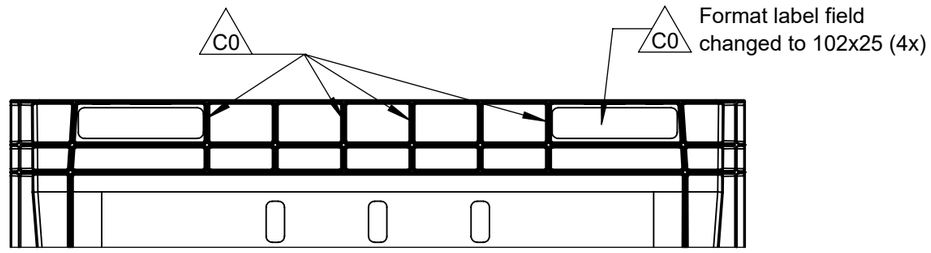

Format label field
changed to 102x25 (4x)

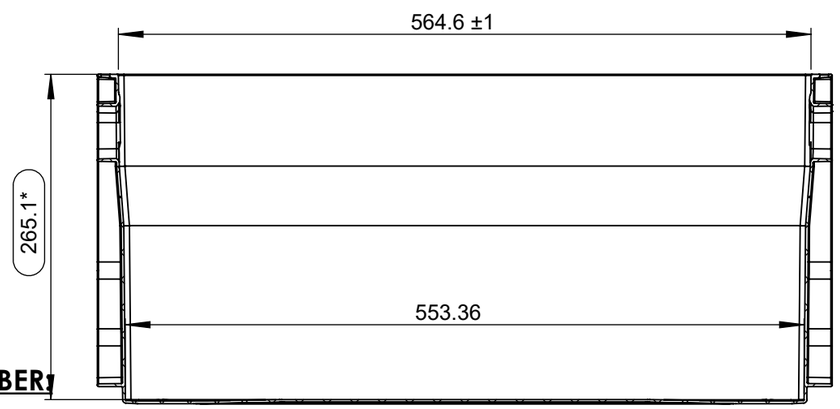

SECTION B-B
SCALE 1 : 5

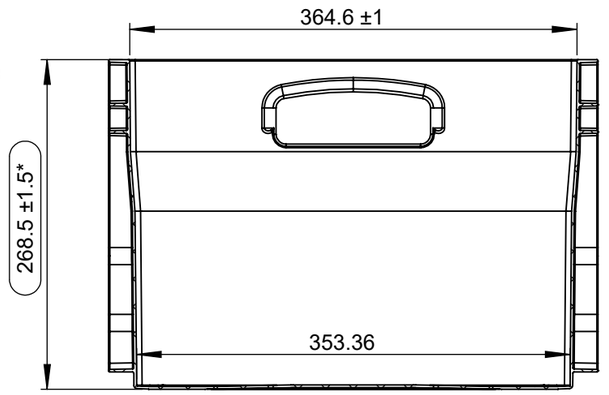

SECTION A-A
SCALE 1 : 5

TOOLNUMBER:
4

(*) Other available height variants:

- 320: 318±1.5 / 315.1
- 420: 418±1.5 / 415.1

BPO Nederland bv
Scheepmakerij 11
2628 AA Delft
+31(0)15 362 0000
www.bpo.nl

MATERIAL	*WEIGHT APPROX.*	VOLUME
PP	1.85 kg	2.03 l
SURFACE FINISH	**GENERAL TOLERANCE**	
Standard	DIN ISO 20457: 2021 - TG5	

PROJECT NAME		PART NUMBER	SCALE	UNITS
Behälterserie		DP61	1:2.5	mm
PROJECT NUMBER	**CUSTOMER**	**PART NAME**	**FORMAT**	**SHEET**
5684	WERIT	AB642701_VS	A3	2 / 5
DRAWN BY	**CHECKED BY**		**DRAWN DATE**	**REV.** **C0**
TO	DR		06/02/2026	

Proprietary data, company confidential.
All rights reserved. Passing on and copying of this document, its use, and communication of its contents it not permitted unless explicitly granted.

REVISIONS				
REV.	DATE	DESCRIPTION	DRAWN BY	CHECKED BY
A0	12/03	REV A0 Release	TO	DR
B0	10/04	VdS dewatering holes changed (not this version)	ME	MW
C0	04/05	Added ribs in top-rim areas, total 16 added	ME	DR

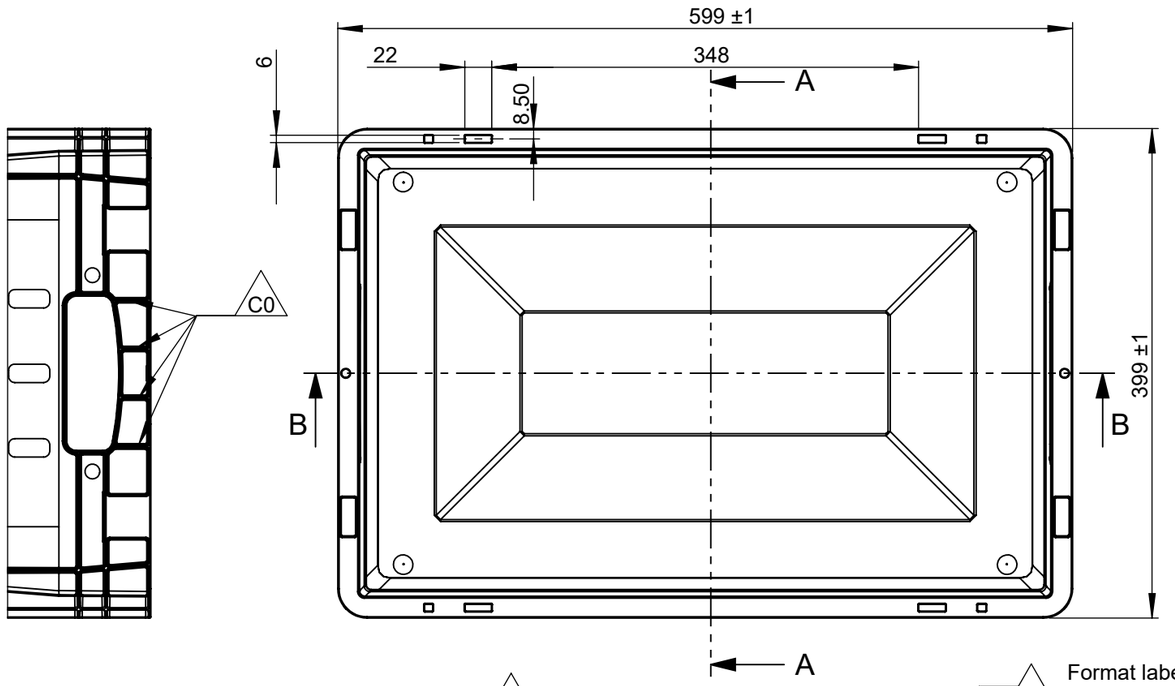

SECTION B-B
SCALE 1 : 5

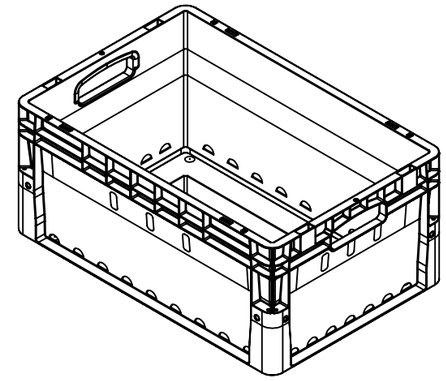

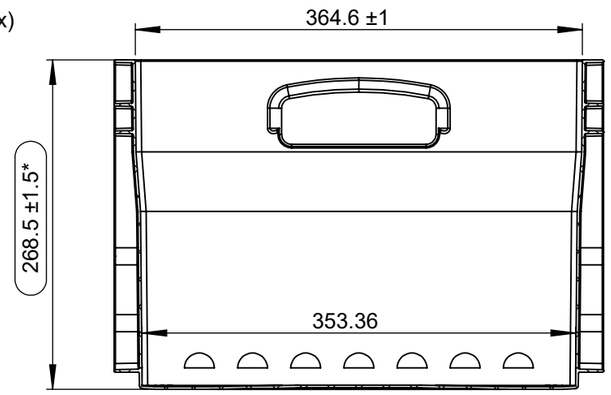

SECTION A-A
SCALE 1 : 5

TOOLNUMBER:
4

(*) **Other available height variants:**

- 320: 318±1.5 / 315.1
- 420: 418±1.5 / 415.1

BPO Nederland bv
Scheepmakerij 11
2628 AA Delft
+31(0)15 362 0000
www.bpo.nl

MATERIAL	WEIGHT APPROX.	VOLUME
PP	1.83 kg	2.01 l
SURFACE FINISH	**GENERAL TOLERANCE**	
Standard	DIN ISO 20457: 2021 - TG5	

PROJECT NAME		PART NUMBER	SCALE	UNITS
Behälterserie		DP61	1:2.5	mm
PROJECT NUMBER	**CUSTOMER**	**PART NAME**	**FORMAT**	**SHEET**
5684	WERIT	AB642701_FM	A3	3 / 5
DRAWN BY	**CHECKED BY**		**DRAWN DATE**	**REV.** C0
TO	DR		06/02/2026	

Proprietary data, company confidential.
All rights reserved. Passing on and copying of this document, its use, and communication of its contents it not permitted unless explicitly granted.

REVISIONS				
REV.	DATE	DESCRIPTION	DRAWN BY	CHECKED BY
A0	12/03	REV A0 Release	TO	DR
B0	10/04	VdS dewatering holes changed (not this version)	ME	MW
C0	04/05	Added ribs in top-rim areas, total 16 added	ME	DR

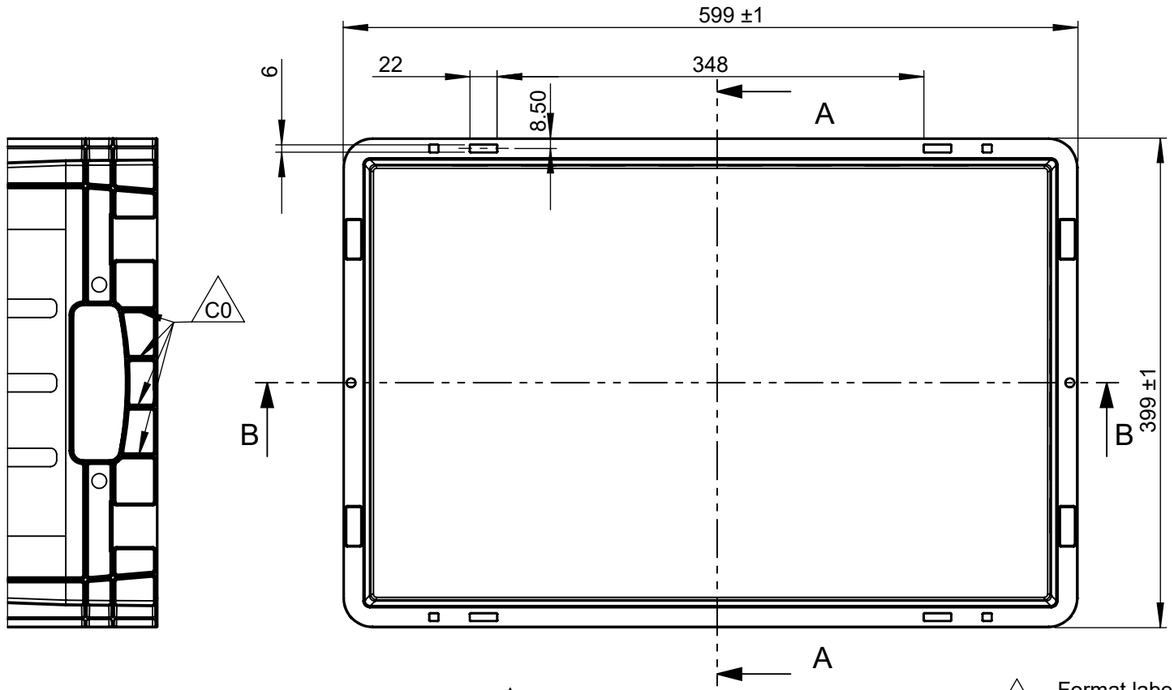

SECTION B-B
SCALE 1 : 5

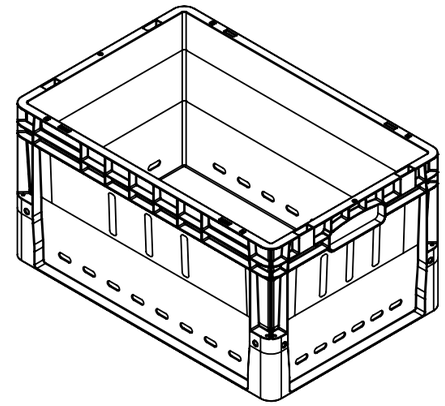

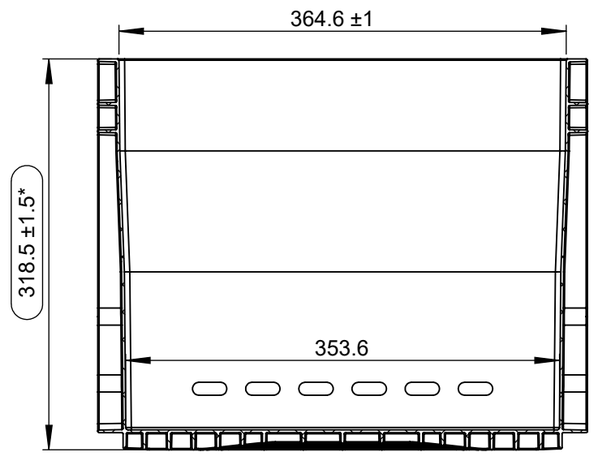

SECTION A-A
SCALE 1 : 5

TOOLNUMBER:
4

(*) **Other available height variants:**

- 270: 268±1.5 / 252.3
- 420: 418±1.5 / 402.3

BPO Nederland bv
Scheepmakerij 11
2628 AA Delft
+31(0)15 362 0000
www.bpo.nl

MATERIAL	*WEIGHT APPROX.*	VOLUME
PP	2.51 kg	2.76 l
SURFACE FINISH	**GENERAL TOLERANCE**	
Standard	DIN ISO 20457: 2021 - TG5	

PROJECT NAME		PART NUMBER	SCALE	UNITS
Behälterserie		DP61	1:2.5	mm
PROJECT NUMBER	**CUSTOMER**	**PART NAME**	**FORMAT**	**SHEET**
5684	WERIT	AB643200_BV01_EH	A3	4 / 5
DRAWN BY	**CHECKED BY**		**DRAWN DATE**	**REV.** **C0**
TO	DR		06/02/2026	

Proprietary data, company confidential.
All rights reserved. Passing on and copying of this document, its use, and communication of its contents it not permitted unless explicitly granted.

REVISIONS				
REV.	DATE	DESCRIPTION	DRAWN BY	CHECKED BY
A0	12/03	REV A0 Release	TO	DR
B0	10/04	VdS dewatering holes changed	ME	MW
C0	04/05	Added ribs in top-rim areas, total 16 added	ME	DR

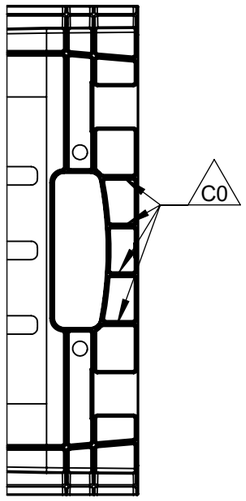

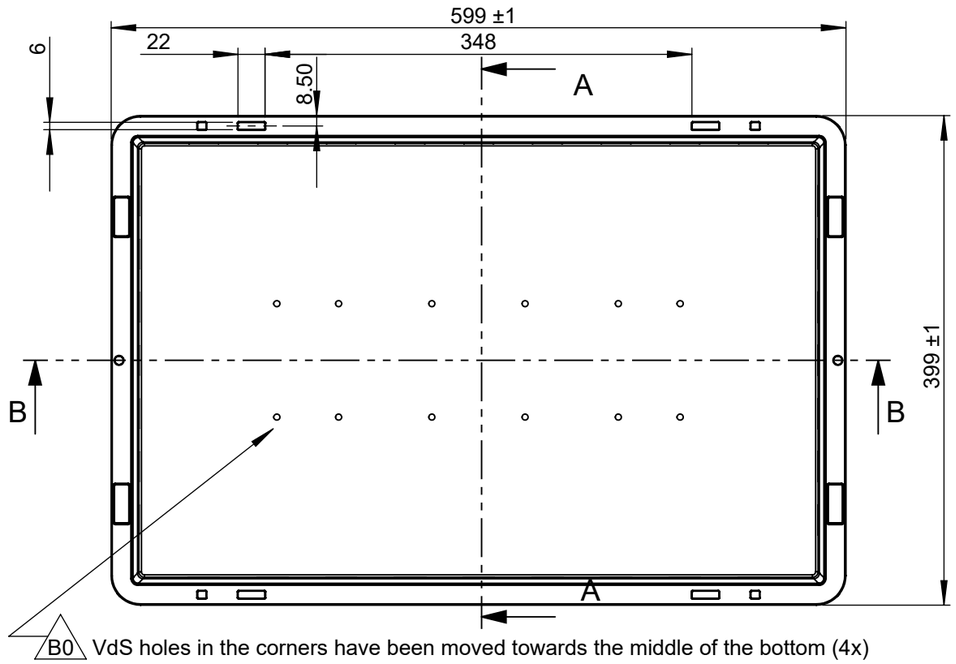

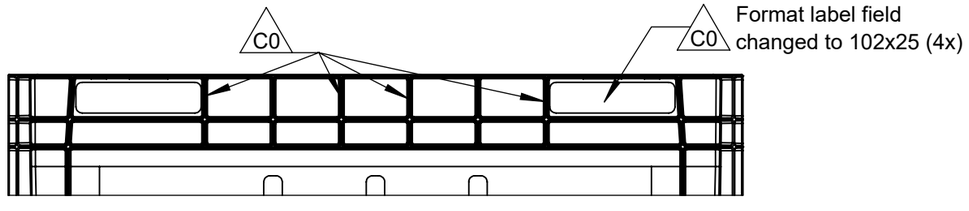

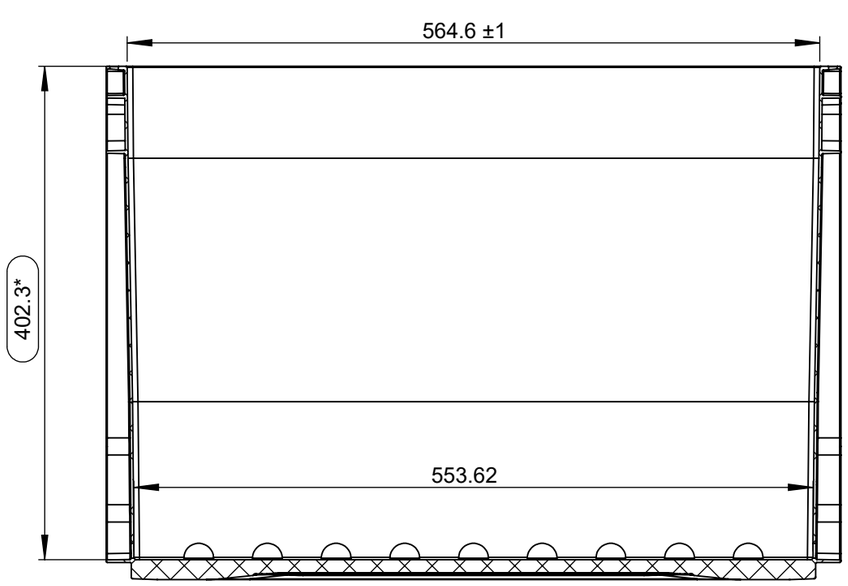

SECTION B-B
SCALE 1 : 5

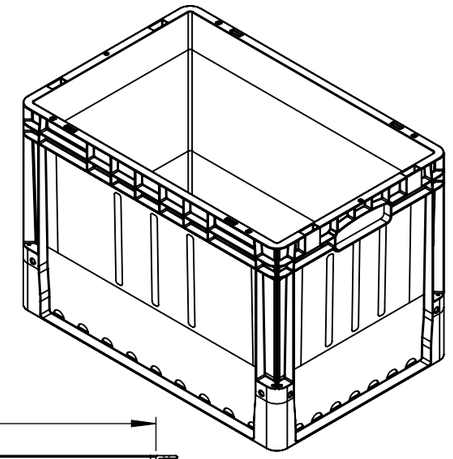

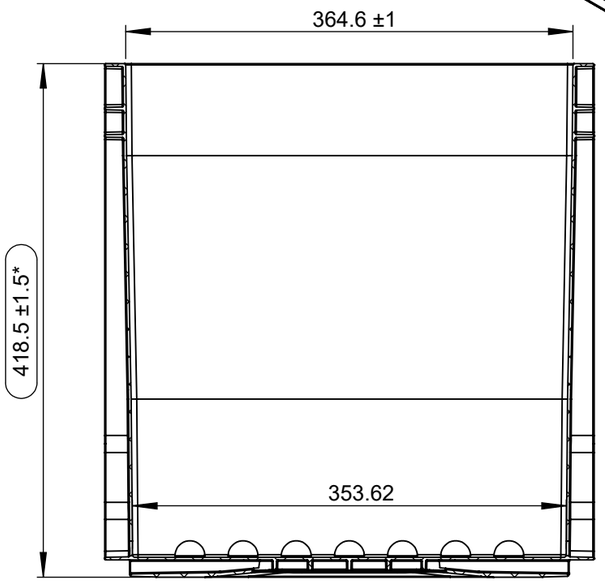

SECTION A-A
SCALE 1 : 5

TOOLNUMBER: 4

Other available height variants:

- 270: 268±1.5 / 252.3
- 320: 318±1.5 / 302.3

BPO Nederland bv
Scheepmakerij 11
2628 AA Delft
+31(0)15 362 0000
www.bpo.nl

MATERIAL	WEIGHT APPROX.	VOLUME
PP	2.98 kg	3.27 l
SURFACE FINISH	**GENERAL TOLERANCE**	
Standard	DIN ISO 20457: 2021 - TG5	

PROJECT NAME		PART NUMBER	SCALE	UNITS
Behälterserie		DP61	1:2.5	mm
PROJECT NUMBER	**CUSTOMER**	**PART NAME**	**FORMAT**	**SHEET**
5684	WERIT	AB644200_VL01_VSFM	A3	5 / 5
DRAWN BY	**CHECKED BY**		**DRAWN DATE**	**REV.**
TO	DR		06/02/2026	**C0**

Proprietary data, company confidential.
All rights reserved. Passing on and copying of this document, its use, and communication of its contents it not permitted unless explicitly granted.